APPLICATION:

8164B - SA74 to SA104TRC installed on tractors with 12 GPM or less
BER0030 –SA88 to SA104TRC installed on tractors with 12 GPM or more

INSTALLATION

Chute Rotation (Figures 1-1a-1b)

1. **Figure 1:** Install the motor (item 1) placing the anchor plate on top (item 2) as shown on figure. Attach with four 3/8"NC x 1 1/4" (item 3) hex. bolts, lockwashers and flat washers (items 4-5). Tighten manually.
2. **Figure 1a:** Install the motor greased gear (item 7) with the key, the 1/4"NC x 1" lg bolt (item 8), the 1/4" lockwasher and the 1/4" flat washer (items 9-10), and the two 12mm flat washers (item 6) between the motor shaft end and the gear (item 7). Tighten according to the ***"Torque Specification Table"***.
3. **Figure 1:** Insert the anchoring flat bar (item 10) between the anchor plate (item 2) and the motor support as shown on figure. Screw the 3/8"NC nuts (item 11) at maximum on the two 3/8"NC x 1 1/2" lg bolts (item 12). Install those two bolts (item 12) by screwing them in the anchoring flat bar (item 10).
4. **Figure 1b**: Adjust the distance between the chute gear and the motor gear according to the following step:
   - **A.** Slightly unscrew the two bolts (item 17) that hold the retaining plate.
   - **B.** Screw the two nuts (item 18) simultaneously until the distance between the retaining plates and the chute base is levelled.
   - **C.** Retighten the bolts (item 17) according to the ***"Torque Specification Table"*** located at the end of the manual.
   - **D.** Adjust the gears to a distance between 1/32" and 1/16" by screwing the two bolts (item 12). Secure with the nuts (item 11) moving those against the anchoring flat bar (item 10). Tighten the four bolts (item 3) at 30 ft-lb (41 N-M).
   - **E.** Run a test at low speed. If the gears have an irregular sound while testing, it means the adjustment is incorrect. Bring parts closer to each other until the sound becomes regular and even.

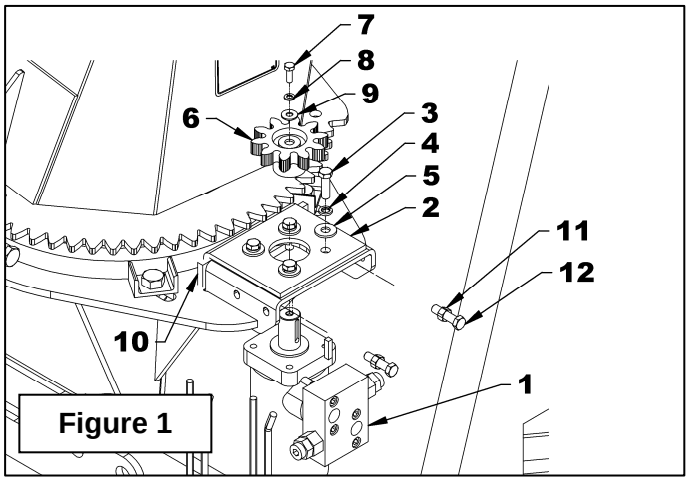

Figure 1

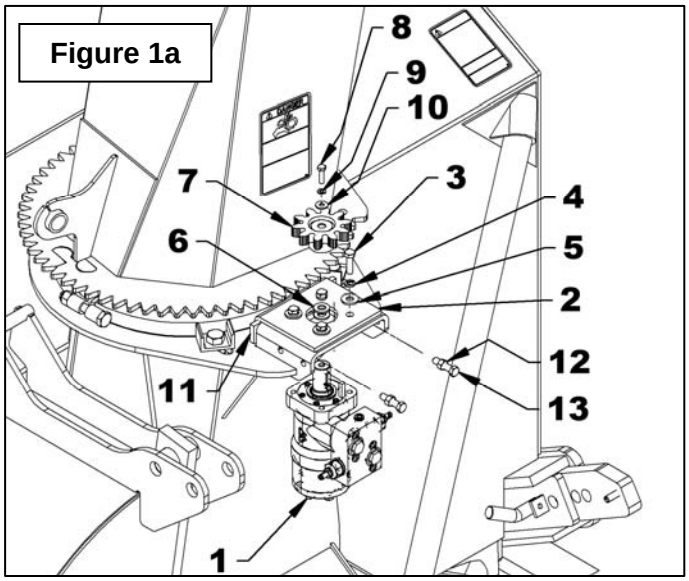

Figure 1a

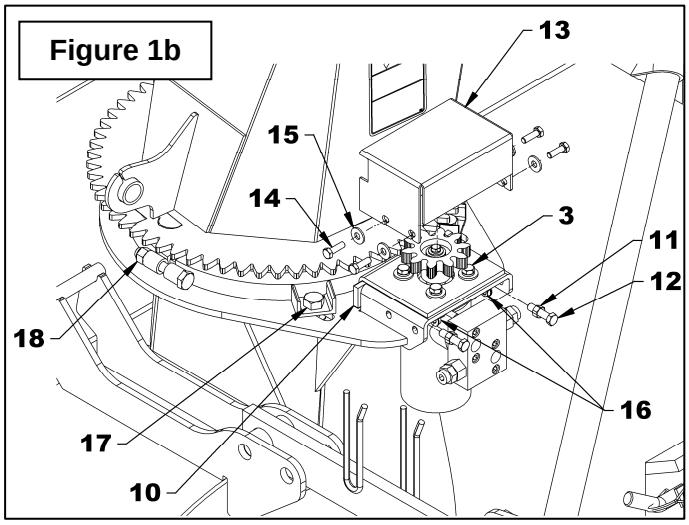

Figure 1b

5. **Figure 4:** Remove the gear and one of the four 3/8"NC x 1 1/4" bolts (item 3) holding the motor, apply Loctite® 243 on the bolt threads and tighten at 33 ft-lb (45 N-M). Repeat the same procedure with the other three bolts.
6. **Figure 1a**: Reinstall the gear and the cover (item 13) with four 5/16" x 1" bolts (item 14), 3/8" flat washers (item 15) on the outside and 5/16" serrated flange nuts (item 16) on the inside. Tighten according to the ***"Torque Specification Table"***.

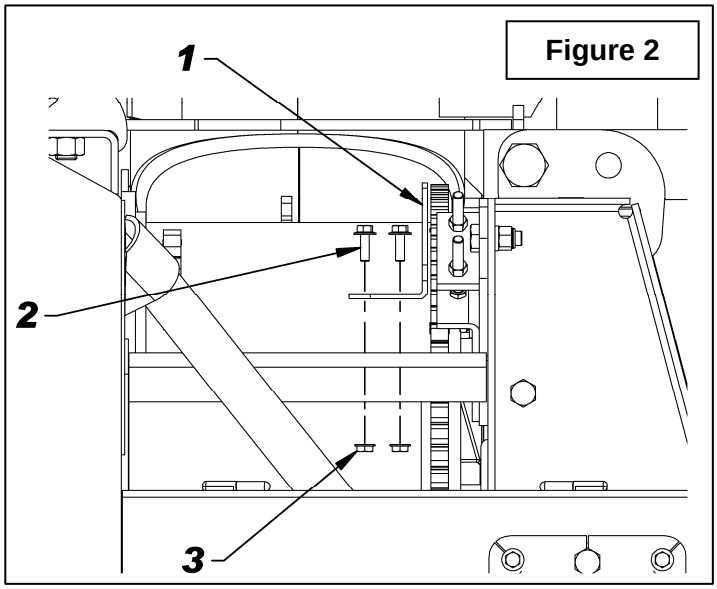

Figure 2

Drum Rotation *(Figures 2-7)*
BER0030 only - 3910105 motor

1. **Figure 2:** Remove the gear protector (item 1) by unscrewing the two 5/16"NC x 1" lg serrated flange bolts (item 2) and the two 5/16"NC serrated flange nuts (item 3).

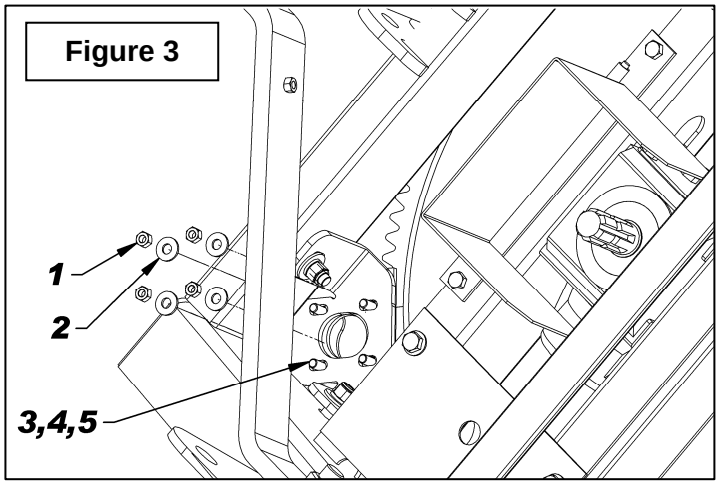

Figure 3

2. **Figure 3:** Remove the four 3/8"NC hex. nuts (item 1) and the four 7/16" hex. hole flat washers (item 2) holding the motor support. This hardware will not be used to install the motor but keep the four 3/8"NC x 1 1/4" hex. bolts, the four 3/8" lockwashers and the four 7/16" hole flat washers (items 3-4-5).
3. **Figure 4:** Attach the hydraulic motor (item 1) to the motor support (item 2) taken apart previously with the four 3/8"NC x 1 1/4" bolts, four 3/8" lockwashers and four 7/16" hole flat washers (items 3-4-5). Tighten the bolts by hand.

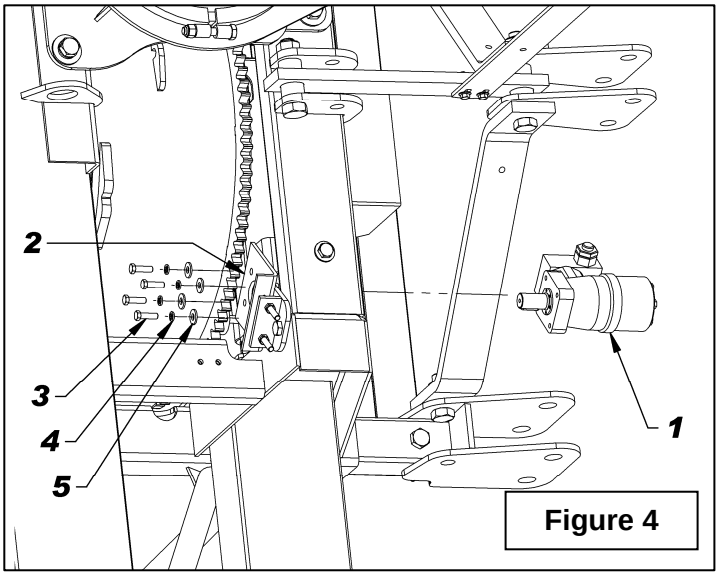

Figure 4

4. **Figure 5:** Place the gear (item 1) on the motor shaft aligning the gear's keyway with the key of the motor. Push the gear completely down placing the teeth between the teeth of the drum gear. If the space is not sufficient, screw in the two stopper bolts (item 5) by tightening the nuts (item 6). Secure the gear in place with a 1/4"NC x 1" lg bolt (item 2), a 1/4" lockwasher (item 3) and a 1/4" flat washer (item 4). Tighten according to the ***"Torque Specification Table"***.

5. **Figure 6:** Adjust the gear by pushing it towards the drum. Push one tooth of the motor gear against one tooth of the drum gear leaving a 1/16" clearance on the other side as illustrated. Tighten the four motor bolts firmly.

IMPORTANT

6. **Figure 7:** Attach the hydraulic hoses (not included) to the motor and connect to the tractor. Turn the motor gear, one turn at a time, checking the 1/16" distance at every turn. If the distance is smaller than 1/16", readjust. This distance must be checked over the whole drum gear. When the gear is properly adjusted, secure the motor with the two stopper bolts (**Fig. 5**, item 5) by placing the two bolt heads against the motor support (**Fig. 4**, item 2). Tighten the screws (**Fig. 5**, item 6) very firmly.

7. **Figure 4:** Remove the gear and one of the four 3/8"NC x 1 1/4" bolts (item 3) holding the motor, apply Loctite® 243 on the bolt threads and tighten at 33 ft-lb (45 N-M). Repeat the same procedure with the other three bolts.

8. **Figure 2:** Reinstall the gear and the gear protector (item 1).

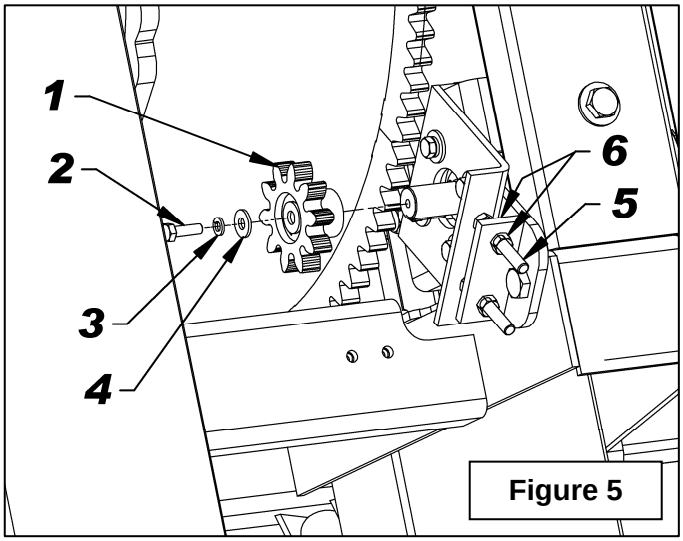

Figure 5

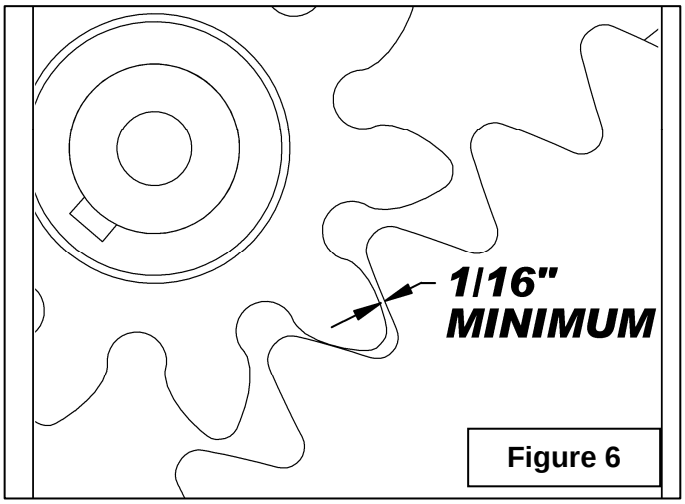

Figure 6

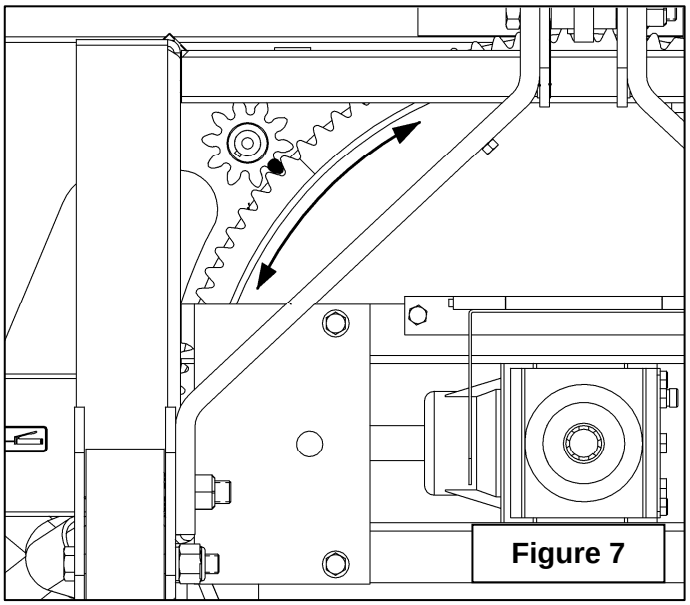
Figure 7

PARTS
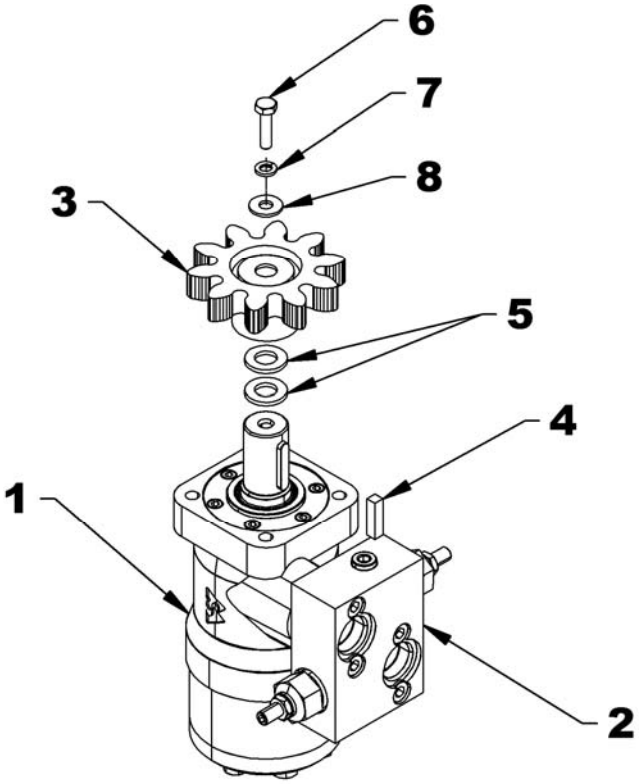
REF.	DESCRIPTION	QTY	PART# 8164B M+S (250cc)	PART# BER0030 M+S (315cc)
1	Hydraulic motor with safety valve	1	3910103	3910105
	- Seal kit,with safety valve o-rings included	1	3910104	3910104
2	- Safety valve	1	3910100	3910100
3	Motor gear	1	665930	665930
4	Key 1/4" x 1/4" x 1" lg	1	655379	655379
5	Flat washer 12mm (13mm hole) PTD	2	O/L	O/L
6	Bolt hex 1/4" x 1" lg gr.5 PTD	1	O/L	O/L
7	Lockwasher 1/4" PTD	1	O/L	O/L
8	Flat washer 1/4" (5/16" hole) PTD	1	O/L	O/L